MARK	DATE	REVISION	REVISER	APP .BY
1				
2				
3				

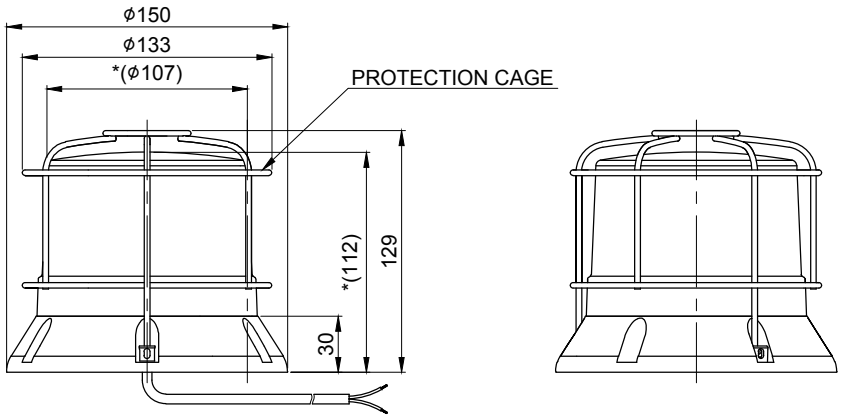

MODEL NO			QA115HLS		
MATERIAL			LENS-PC		
			HOUSING-PC		
			-		
COLOR OF LENS			RED( ), AMBER( )		
FLASHES PER MIN.			45 ~ 55		
USE VOLT.	LED	CURRENT	DC12V ~ 24V	3W	MAX. 0.710A
PROTECTION GRADE			WATER & DUST PROOF IP66		
CABLE ENTRY			ϕ9 LEAD HOLE		
COLOR OF HOUSING			MAKER STANDARD		
ACTION			LED LAMP STROBE LIGHT		
USER SPECIFICATIONS			PROTECTION CAGE		

※ *(107), *(112) size without protection cage.

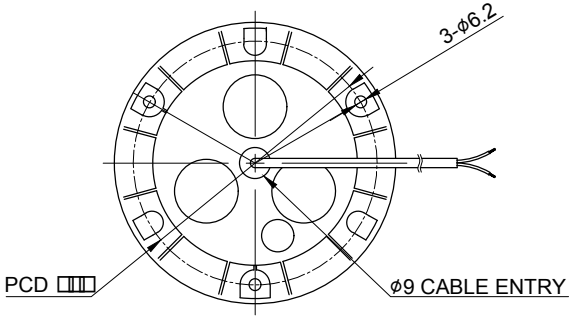

ISO2768-1 : CLASS OF TOLERANCE		f	m	c	v
FOR LINEAR DIMENSIONS	0.5~3	±0.05	±0.1	±0.2	-
	3~6			±0.3	±0.5
	6~30	±0.1	±0.2	±0.5	±1
	30~120	±0.15	±0.3	±0.8	±1.5
	120~400	±0.2	±0.5	±1.2	±2.5
	400~1000	±0.3	±0.8	±2	±4
FOR ANGULAR DIMENSIONS	0~10	±1°		±1°30'	±3°
	10~50	±0°30'		±1°	±2°
	50~120	±0°20'		±0°30'	±1°
	120~400	±0°10'		±0°13'	±0°30'

SURFACE FINISH

Nr.	DWG. NO.	TITLE/ NAME	MAT'L	QT'Y	REFERENCE
-	-	-	-	1	-

DSND BY	CHKD BY	CHKD BY	APRV BY	VIEW	DATE
S.H.KIM	J.H.PARK		J.K.HAN	3	2016.08.30

TITLE: QA115HLS OUTLINE DRAWING

MODEL: QA115HLS

DWG. NO.: QA115HLS_OUT

SCALE	SIZE	REV	SHEET
N/S	A4	00	1/1

A4(297X210)