Flame/ Dust Explsoion Proof LED Tower Lights

QTEX/ QTEXB

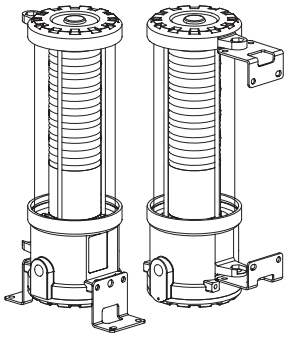

Thank you for purchasing Qlight's products. Please read this user manual carefully prior to installation and operation to ensure safe and correct use.

⚠ Safety Precautions for Explosion Proof Products

Please follow the instruction below to ensure safe and correct use of explosion proof products.

1. Explosion proof products should be managed according to explosion proof regulations. Do not disassemble, assemble, alter or repair the product arbitrarily.
2. The temperature rating of the product is the temperature the product will experience at the applied rated voltage and ambient temperature indicated.
3. Use cable glands that satisfy the product's explosion proof grade and temperature grade.
4. Unused cable entries must be filled with material that meets the explosion proof grade and temperature rating.
5. Before installing the product, please make sure all cautions indicated on the labels, packaging, and operation manual of the product are fully understood.
6. Installation, maintenance and repair of the product must be performed by experts in the explosion proof field, or persons who have received relevant training.
7. For safety, the product should be installed and operated in environments that avoid high temperature and high pressure.
8. Please follow general safety precautions and avoid installing the product in locations that may generate excessive heat.
9. When installing the product in places where chemicals are located, please make sure that the environment does not have two or more incompatible chemicals mixed. For safety, please read the instruction manual carefully and be mindful of the chemical compositions where the product is used.
10. This product requires grounding.
11. Please note that special conditions shall be applied if the sign "X" is placed after the certificate number.
    1) For safe use, regular overpressure test must be carried out in accordance with EN 60079-1, clause 15.2.3.
    2) For safe use, tempered glass must be protected from strong impact
12. When using NPT cable glands (plugs), it is recommended to use them after applying non-hardening grease to maintain protective performance.

⚠ Precaution for Safety

Failure to follow the instructions below may cause a loss of life or serious physical injury.

1. During wiring or maintenance, please completely turn off the power of the product. (Failure to follow this may lead to an electric shock.)
2. Do not install the product in locations that subjects it to excessive dust or water other than the conditions designated by the IP protection ratings indicated for each product. (Failure to follow these instructions may cause a fire to the product, electric shock, physical injury, malfunction or damage to the product.)
3. Do not alter or repair this product. If maintenance or repair service is required, please contact your local Qlight contact point. (Failure to follow these instructions may lead to fire, electric shock, or product damage.)
4. Please apply the correct voltage to the product. (Failure to follow these instructions may lead to fire, electric shock, or product damage.)
5. When the product is applied to a condition that may impact lives or property, please make sure to have a double safety device. (Failure to follow this may cause damage to property, fire, electric shock and loss of life.)

⚠ Precautions for Correct Use

Failure to follow the proper instructions may cause damage to property, the product, or malfunction of the product that would void the warranty.

1. Please remove any objects that can interrupt ventilation around the product.
2. Please turn off the power of the product immediately if it fails to operate properly.
3. Carefully wire the product according to each product's specification.
4. Please be careful in preventing chemicals such as thinner, benzene, etc. in contact with the surface of the product.
5. Do not apply excessive force/impact to the product.
6. Failure to follow any of the instructions above may cause malfunction or damage to the product, fire, and electric shock.

Please scan the QR code for more detailed product information.

www.qlight.com

Ordering Specifications

QTEX	-	3	-	12	-	RAG
[Model number]		[Layer count]		[Voltage]		[Color]
• QTEX • QTEXB		• 1-1Layer • 2-2Layers • 3-3Layers • 4-4Layers • 5-5Layers		• 12-DC12V • 24-DC24V • 95/230-AC95V-230V		R-Red A-Amber G-Green B-Blue W-White

Product Specifications

■ Explosion Proof Specifications

Model number	QTEXB
	QTEX
Range for operating voltage	DC12V, DC24V
	AC 95V-230V
Ex mark	IECEX - Ex db IIC T6 Gb Ex tb IIIC T85°C Db ATEX - Ex II2G Ex db IIC T6 Gb Ex II2D Ex tb IIC T85°C Db KCs - Ex d IIC T6 IP66 TIIS - IIC T6 Gb (QTEXB only)
Ambient operating temperature	–40°C ≤ Tamb ≤ 60°C
Explosion proof Zone	Zone1, Zone2, Zone21, Zone22
Protection rating	IP66

Zone definitions(Gas)	Zone 1	High risk gas/vapour		
	Zone 2	Medium risk gas/vapour		
Group definitions(Gas)	GROUP II A	Acetone, Petrol, Methanol, Propane, Toluene		
	GROUP II B	Ethylene, City gas		
	GROUP II C	Hydrogen, Acetylene, Carbon sulphide		
Maximum surface temperature of electrical equipment	T1	450°C	T4	135°C
	T2	300°C	T5	100°C
	T3	200°C	T6	85°C
Zone definitions(Dust)	Zone 21	High risk powder/dust		
	Zone 22	Medium risk powder/dust		
Group definitions(Dust)	GROUP II A	Ignitible fibers/flyings(more than 0.5mm)		
	GROUP II B	Non-conductive dusts		
	GROUP II C	Conductive dusts		

■ General Product Specifications

Model number	Layer	Voltage	Certificate	Weight	Color
QTEX (Steady/ Flashing)	1	DC12V	IECEx, ATEX, KCs	4.01kg	R-Red
		DC24V		4.01kg	
		AC95V-230V		4.02kg	
	2	DC12V		4.15kg	R-Red G-Green
		DC24V		4.15kg	
		AC95V-230V		4.16kg	
	3	DC12V		4.31kg	R-Red A-Amber G-Green
		DC24V		4.31kg	
		AC95V-230V		4.32kg	
	4	DC12V		4.46kg	R-Red A-Amber G-Green B-Blue
		DC24V		4.46kg	
		AC95V-230V		4.47kg	
	5	DC12V		4.61kg	R-Red A-Amber G-Green B-Blue W-White
		DC24V		4.61kg	
		AC95V-230V		4.62kg	

Model number	Layer	Voltage	Certificate	Weight	Color
QTEXB (Steady/ Flashing)	1	DC12V	IECEx, ATEX, KCs, TIIS	4.11kg	R-Red
		DC24V		4.11kg	
		AC95V-230V		4.12kg	
	2	DC12V		4.25kg	R-Red G-Green
		DC24V		4.25kg	
		AC95V-230V		4.26kg	
	3	DC12V		4.41kg	R-Red A-Amber G-Green
		DC24V		4.41kg	
		AC95V-230V		4.42kg	
	4	DC12V		4.56kg	R-Red A-Amber G-Green B-Blue
		DC24V		4.56kg	
		AC95V-230V		4.57kg	
	5	DC12V		4.71kg	R-Red A-Amber G-Green B-Blue W-White
		DC24V		4.71kg	
		AC95V-230V		4.72kg	

• Protection rating : IP66

■ QTEX Light source current(based on 1 layer)

Voltage	DC12V	DC24V	AC95V-230V
Light source current(1 layer)	0.080A	0.060A	Max.0.055A

■ QTEXB Light source/buzzer current(based on 1 layer)

Voltage	DC12V	DC24V	AC95V-230V
Light source current(1 layer)	0.080A	0.060A	Max.0.055A
Buzzer current	0.060A	0.075A	Max.0.080A

Dimensions

(Units : mm)

QTEX/ QTEXB - Direct mount type model

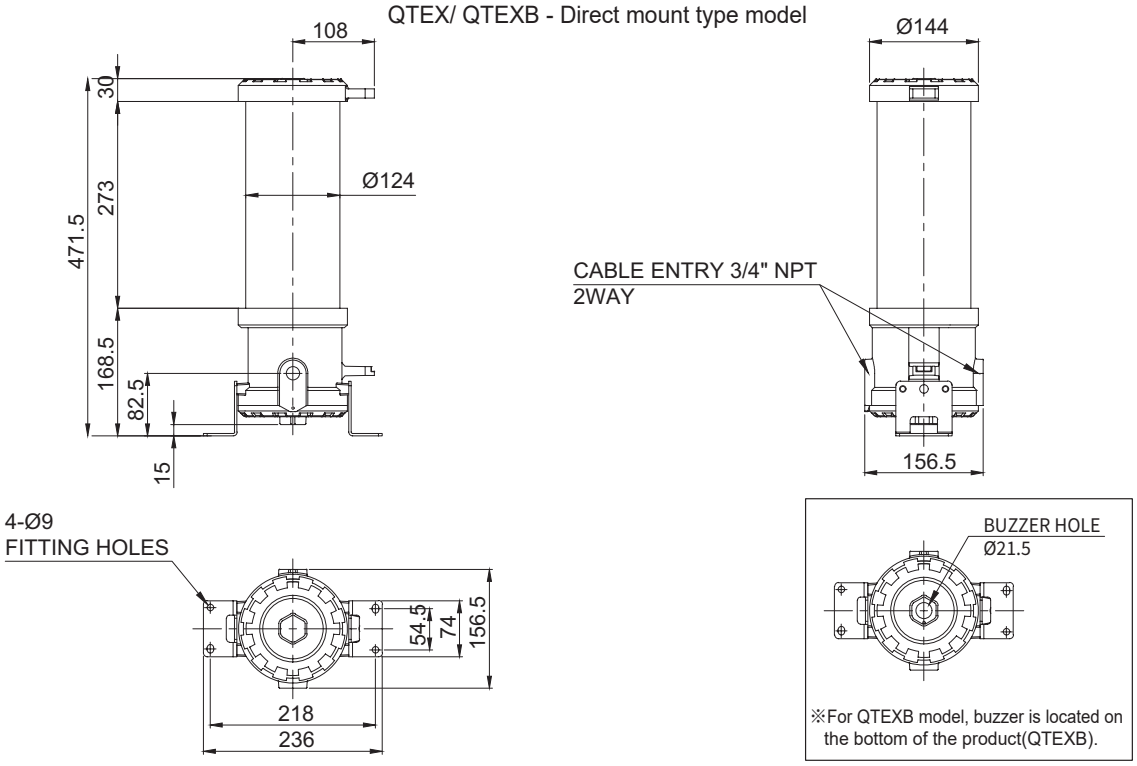

QTEX/ QTEXB - Wall mount type model

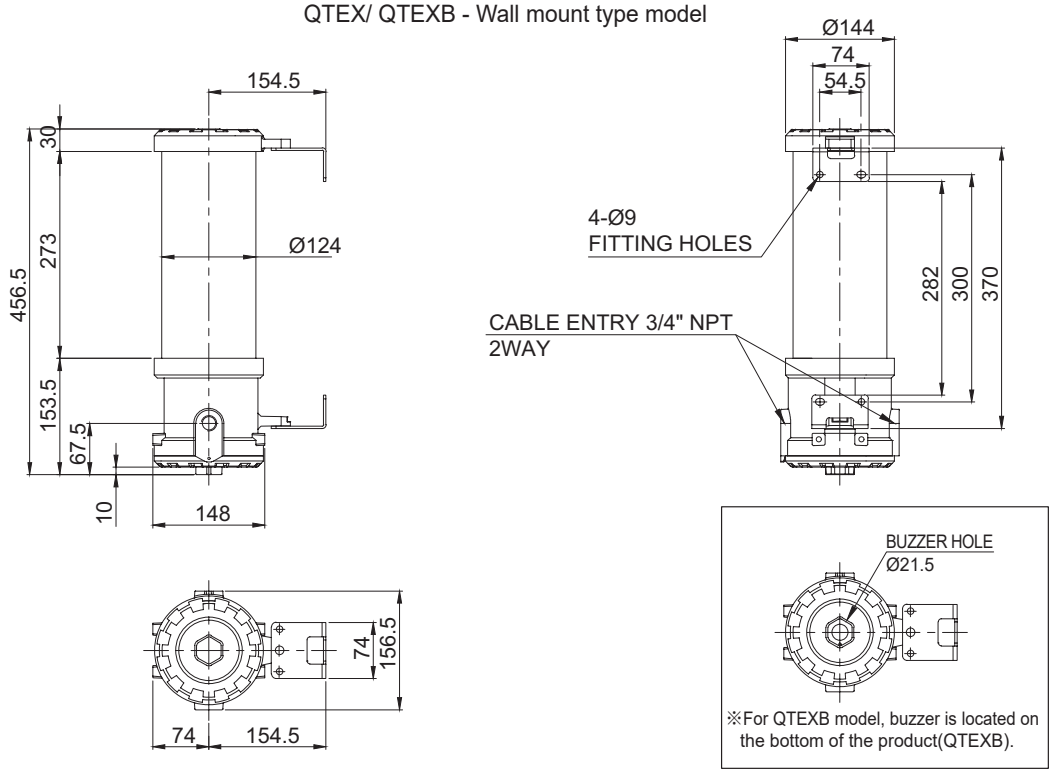

Grounding Instructions

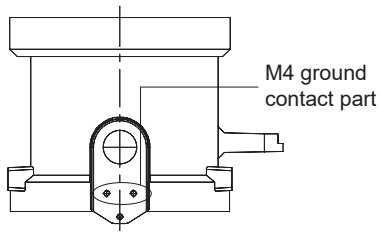

- Please use an M4 bolt at the location marked in the diagram above to ground the product.
- When connecting the grounding cable, please use a ring terminal.
- Please use a grounding cable with a diameter greater than 4mm.
- Please make sure to ground the common line(-) of the product.

Explosion proof product label

- All equipment that are used in explosive environment must have a label showing on following details in accordance with International Electrotechnical Commission(IEC) Regulation 60079-0.

ATEX, IECEx explosion proof certification

ATEX

IECEx

WARNING
1. DO NOT OPEN WHEN AN EXPLOSIVE ATMOSPHERE MAY BE PRESENT.
2. TIGHTEN ALL SCREWS AND CABLE GLANDS PROPERLY.
3. AFTER DE-ENERGIZING, DELAY 5 MINUTES BEFORE OPENING.
4. DO NOT OPEN WHEN ENERGIZED.

KCs explosion proof certification

KCs

WARNING
1. DO NOT OPEN WHEN AN EXPLOSIVE ATMOSPHERE MAY BE PRESENT.
2. TIGHTEN ALL SCREWS AND CABLE GLANDS PROPERLY.
3. AFTER DE-ENERGIZING, DELAY 5 MINUTES BEFORE OPENING.
4. DO NOT OPEN WHEN ENERGIZED.

It must not be dismantled due to an explosion proof feature
본 제품은 방폭제품으로 제품분해를 금지 함

WARNING
1. DO NOT APPLY EXCESSIVE FORCE/IMPACT TO THE PRODUCT.
2. 방폭유리에 충격이나 무리한 힘을 가하지 마시오.

TIIS explosion proof certification

TIIS

労（平 01. 08）検
第TC22545X号
製造元　株式会社Qlight
販　売　大江電機株式会社

警告
1. ネジを締める場合は737N/㎡以下のトルクで締めてください。
2. ケーブルの引き込み口は"3/4NPT

警告
1. 爆発の恐れ、危険場所ではカバーを開けないでください。
2. 全てのねじとケーブルグラウンドは正しく締めてください。
3. 電源を抜いた後、5分経ってからカバーを開けてください。

General label

WARNING
1. "USE FASTENERS WITH YIELD STRESS ≥ (737N/m²)
2. IDENTIFICATION OF THREAD SIZE AND TYPE, " 3/4NPT"

Wiring Instructions

- QTEX/ QTEXB model can be wired with either external contact and transistor.
- When wiring with transistor, please make sure to use PNP transistor and follow the wiring instructions in the diagram below.

QTEX - DC/AC
QTEXB - DC/AC

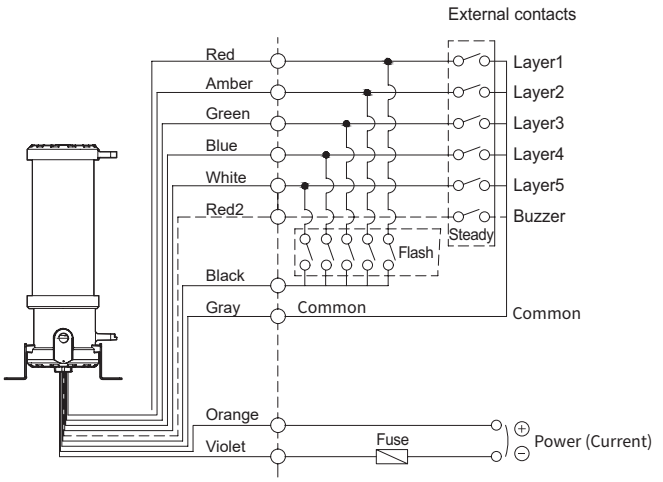

QTEX - DC/AC
QTEXB - DC/AC

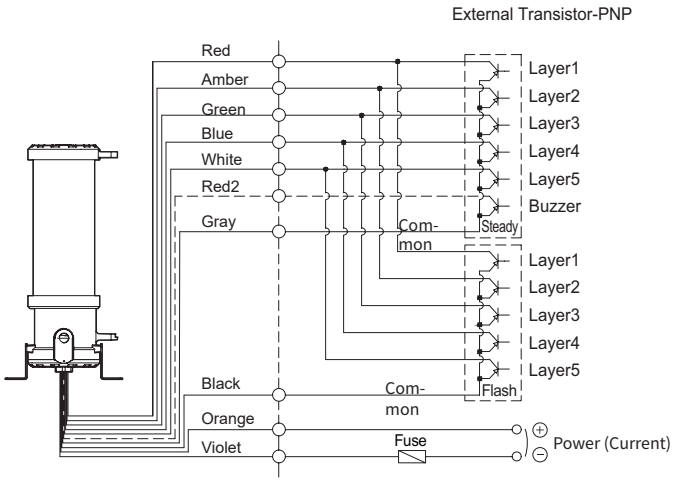

Terminal Block Wiring Instructions

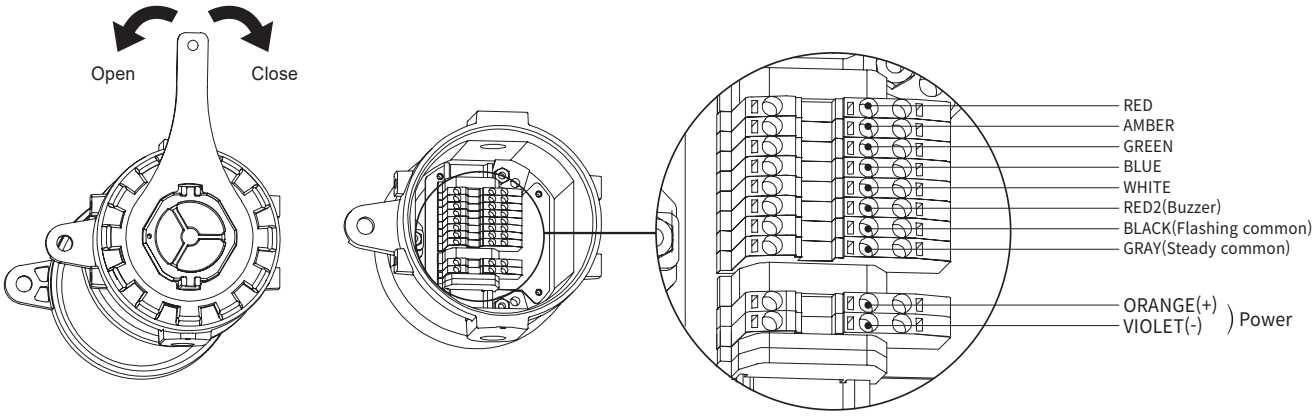

- Disassemble the terminal block cover by turn the terminal block cover in the CCW direction using the QTEX (B) cover disassembly tool.
- QTEX model features a terminal block located inside of the housing for easy wiring. For detailed wiring instructions, please refer to the wiring Instructions above.
- After wiring, place the cover around the top of product and turn the cover in the CW direction using the QTEX (B) cover disassembly tool.

※Please make sure to close the terminal block cover completely to prevent failure in waterproofing.

※ Applicable cable range : AWG14-AWG24

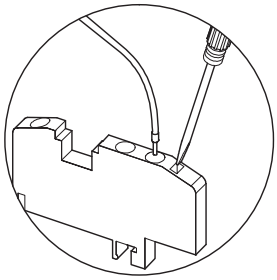

- When wiring, please insert the wires while pushing down on the lever of each terminal box wiring port using a terminal block screw driver(-).
- When removing the wiring, please pull on the wire while simultaniously pushing down on the lever of each terminal box wiring port.

※ If wires are removed while the lever of the terminal box wiring port is not pushed down, it may cause damage to the contact point of the terminal box.

Parts Definition/ Installation

QTEX/ QTEXB Direct mount type model

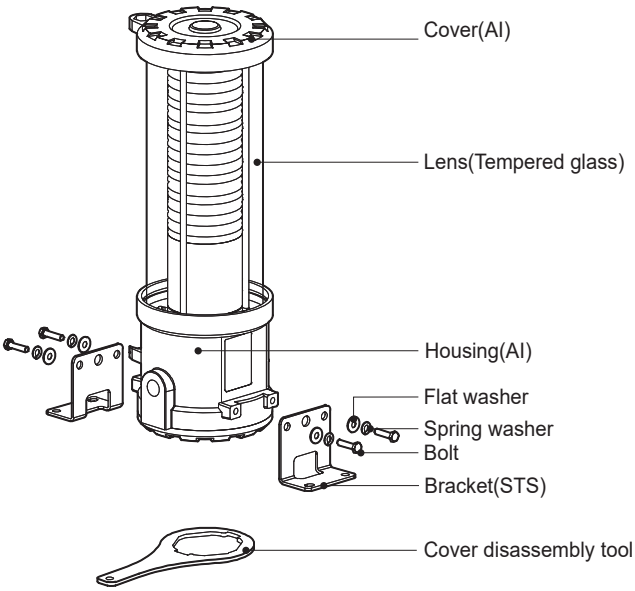

QTEX/ QTEXB Wall mount type model

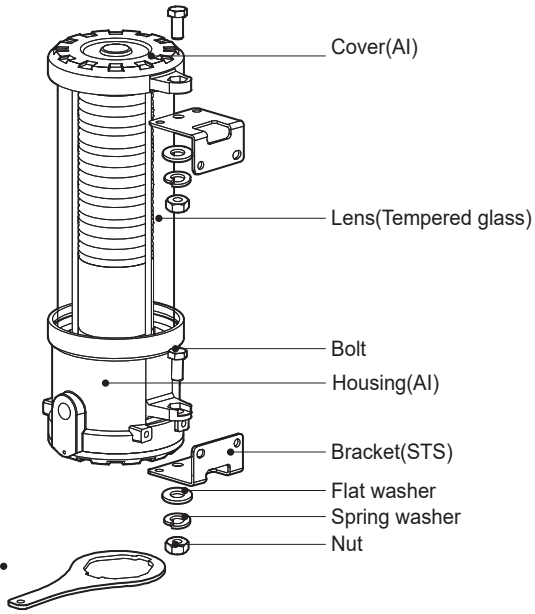

- First, machine taps or holes on the mounting surface.
- The mounting hole of this product is 9mm in diameter.
- When machining taps, fasten the bolt through the mounting hole of the product.
- When machining holes, insert the bolt through the hole of the product, and tighten the nut from the opposite side of the mounting surface.
- Based on your application needs, use a wall mount or direct mount bracket to secure the product's cover or body to the desired mounting surface.

Mounting Hole Specifications

- Machine holes on the mounting surface referring to the diagram below.

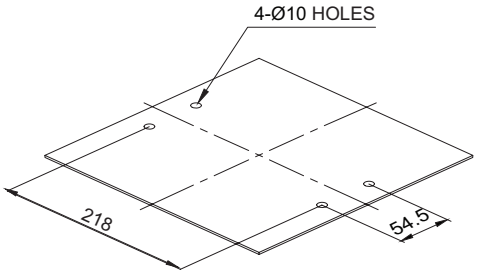

QTEX/ QTEXB Direct mount type model

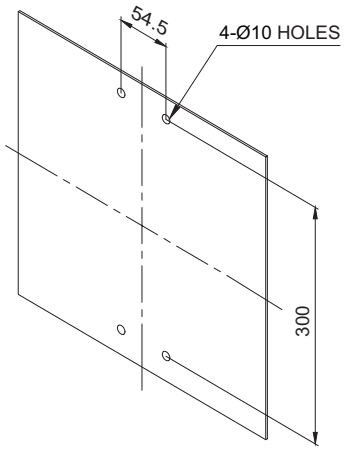

QTEX/ QTEXB Wall mount type model

Installation Environment and Protection Rating

- This product is designed for use with non-sparking explosion proof structure.
- Please make sure to use the prduct in a environment where satisfies regulated explosion proof grading.
- For further information, please visit our website (www.qlight.com).

Product installation direction

■ **Install the product in accordance with the manual. Otherwise rainwater or moisture may penetrate into the product.**

· BEACON/SIGNALING LIGHT

※ For products with a protection rating of less than IPX4, please install it vertically.

Power cord inlet part shall not be facing the sky.

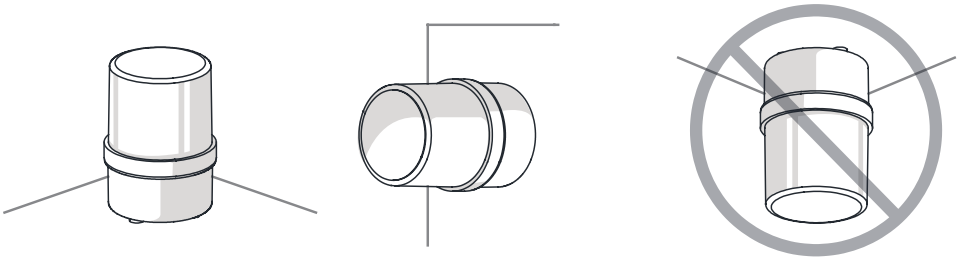

· ELECTRONIC SOUNDER/SIGNAL HORN

Sounder part shall not be facing the sky.

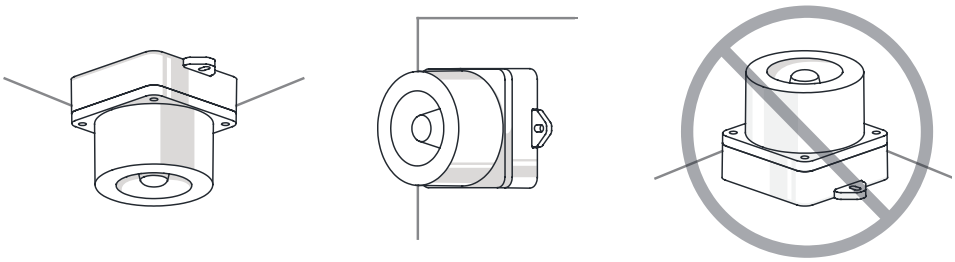

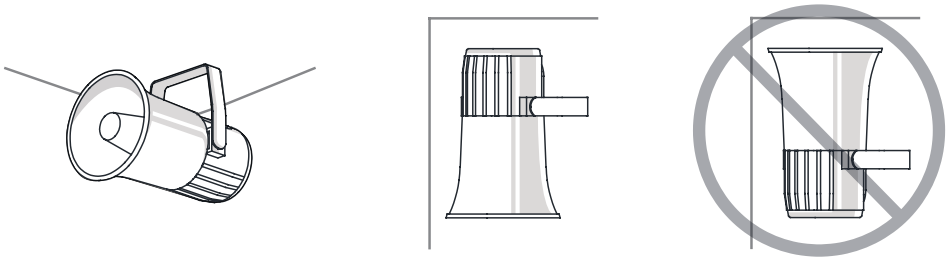

· HEAVY-DUTY & EXPLOSION PROOF SIGNALINGS

Sounder part shall not be facing the sky.

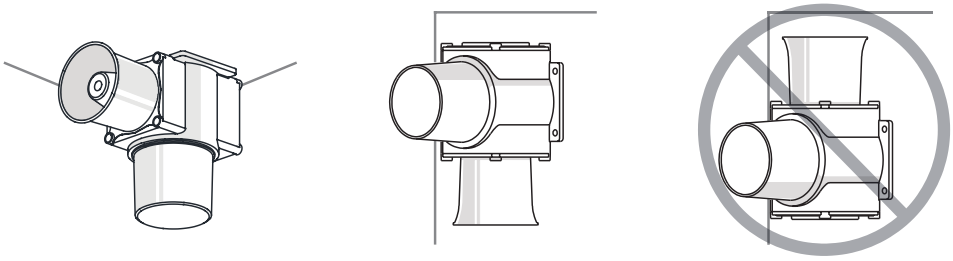

· SIGNAL TOWER LIGHTS

※ For products with a protection rating of less than IPX4, please install it vertically.

Power cord inlet part shall not be facing the sky.

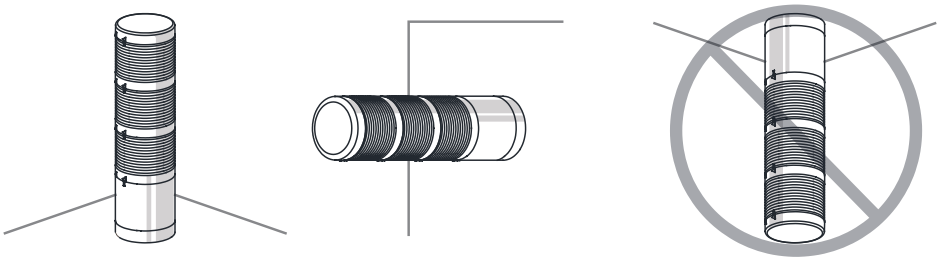

⚠ For your safety

Specification and dimensions listed in this catalogue subject to change without notice for product quality improvement.
The newest product information is available on our website.(www.qlight.com)
Please read the instruction manual attached to the product carefully before installation and use.

Qlight Co., Ltd. www.qlight.com | trade@qlight.com
Head Office | Suite #1510, STX-V Tower, 128 Gasan digital 1-ro, Geumcheon-gu, Seoul, Korea
Tel. +82-2-2679-6152(Toll free. +82-80-328-2222) Fax. +82-2-2679-6154
Factory | 185-25, Mukbang-ro, Sangdong-myeon, Gimhae-si, Gyeongsangnamdo, Korea Tel. +82-55-328-1111(Toll free. +82-80-328-1111)
Qlight Overseas Sales Dept | 704 Nakdong-daero, Sasang-gu, Busan, Korea(Eomgung-Dong) Tel : +82-51-620-4100
Qlight Public Relations & Marketing Team Office | 704 Nakdong-daero, Sasang-gu, Busan, Korea(Eomgung-Dong) Tel. +82-51-245-0017

SHANGHAI Qlight Electronic Co., Ltd. www.qlight.com www.qlightcn.com | qlightcn@qlight.com
China Factory/ Shanghai Sales Office | #Room 333 Building B, #11, Lane 450, Zhenda Road, Baoshan District, Shanghai, China
Tel. +86-21-6651-7100 Fax. +86-21-6315-3929
China Factory Site 2 (Qidong) | #33, Haiyan Road, Qidong High-tech Industrial Development Zone, Qidong, Jiangsu Province, China
Tel +86-513-8384-9999 Fax +86-513-8384-9910

Qlightec
Innovation in Alarm & Signal

Product Operation Inquiry / Customer Support +82-51-620-4100
You can expect prompt service if you have exact information such as model name, symptom, telephone number and address.
※ALL PRODUCT, PRODUCT SPECIFICATIONS AND DATA ARE SUBJECT TO CHANGE WITHOUT NOTICE TO IMPROVE RELIABILITY, FUNCTION OR DESIGN OR OTHERWISE.
Head office : Suite #1510, STX-V Tower, 128 Gasan digital 1-ro, Geumcheon-gu, Seoul, Korea (Postal Code : 08507)
Factory : 185-25, Mukbang-Ro, Sangdong-Myeon, Gimhae-Si, Gyeongsangnam-Do, Korea (Postal Code : 50805)
www.qlight.com

EN - QTEX - 2403A